KS3270,1,2,3,5,6,7,8AXBS

Twin Handles 8" Deck Mount Kitchen Faucet With Brass Sprayer

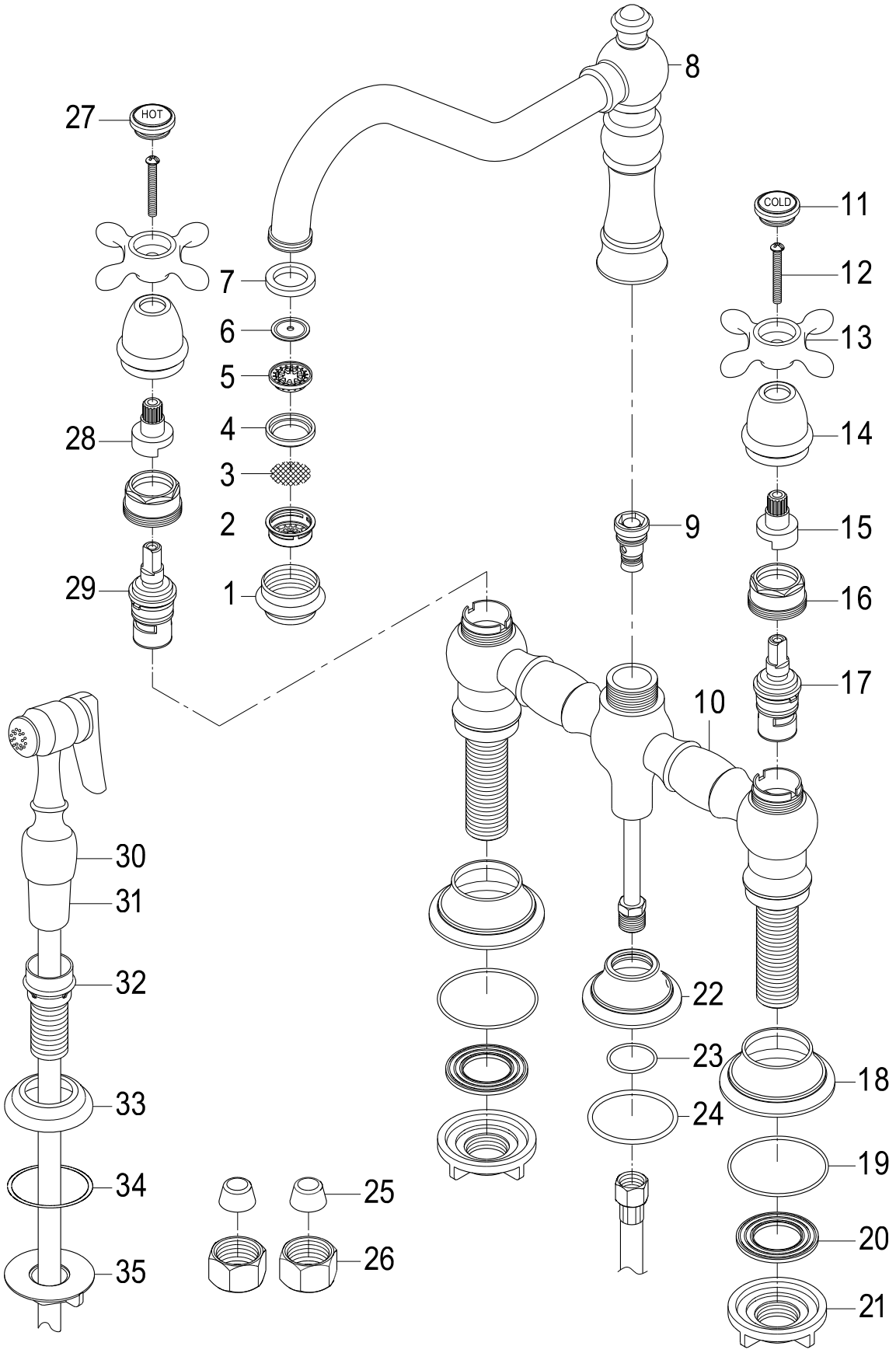

Ref# KS3270,1,2,3,5,6,7,8AXBS | 2018-10-A